RF Module with MSP430F1611 and CC1100

MRF1611CC1100

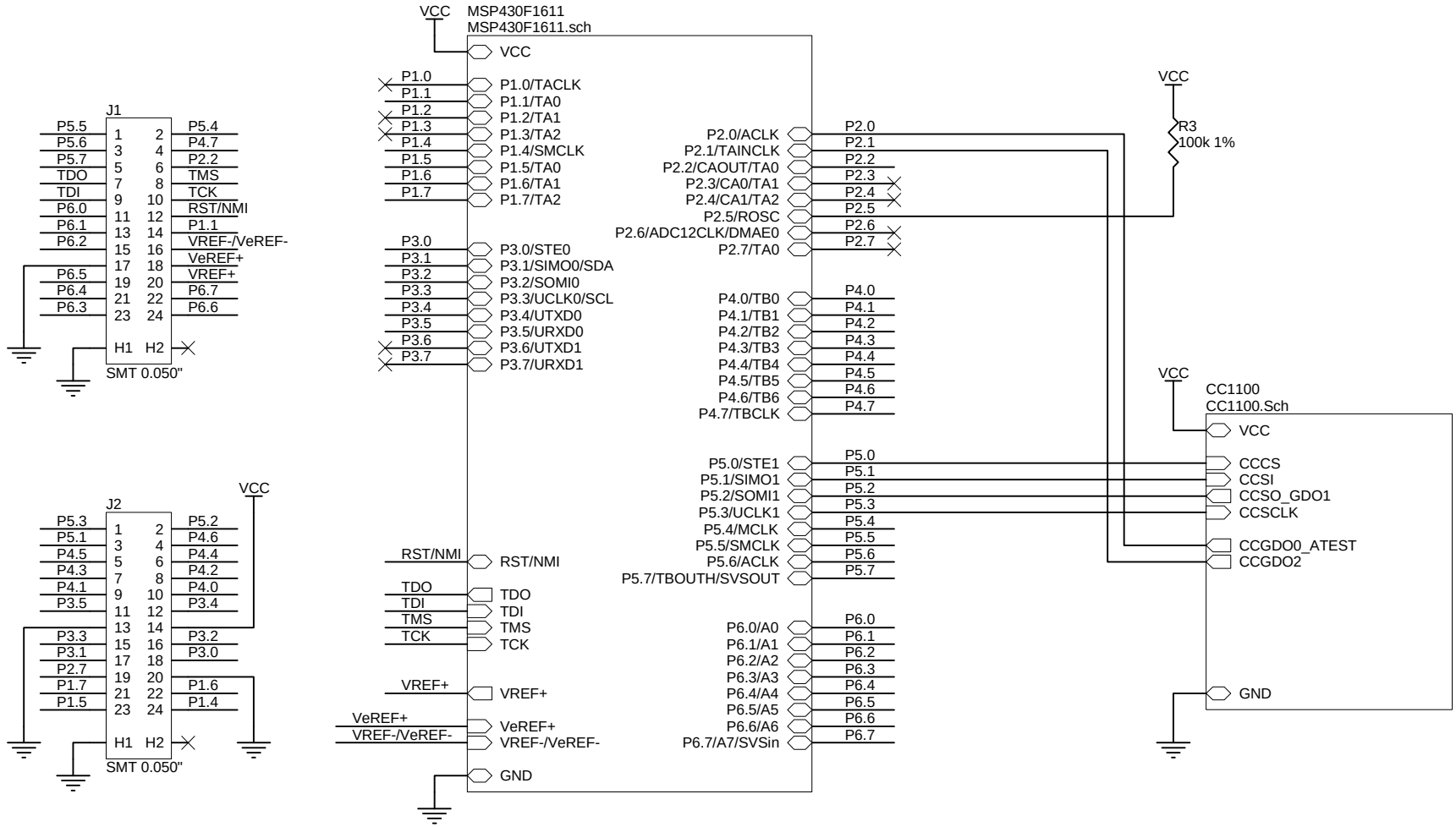

If VeREF+ or VeREF- are used, provide 4.7uF ceramic caps externally

FID1 FID2 FID3 FID4

FIDUCIAL FIDUCIAL FIDUCIAL FIDUCIAL

SoftBaugh

www.softbaugh.com 800 794-5756

Copyright (c) SoftBaugh, Inc., 1999-2003.
Do not reproduce or distribute without permission.

Sheet: RF Module with MSP430F1611 and CC1100		
Project: MRF1611CC1100		
Date: 10-Jul-2006	1 of 3	v. 1.0

MSP430F1611

MRF1611CC2420

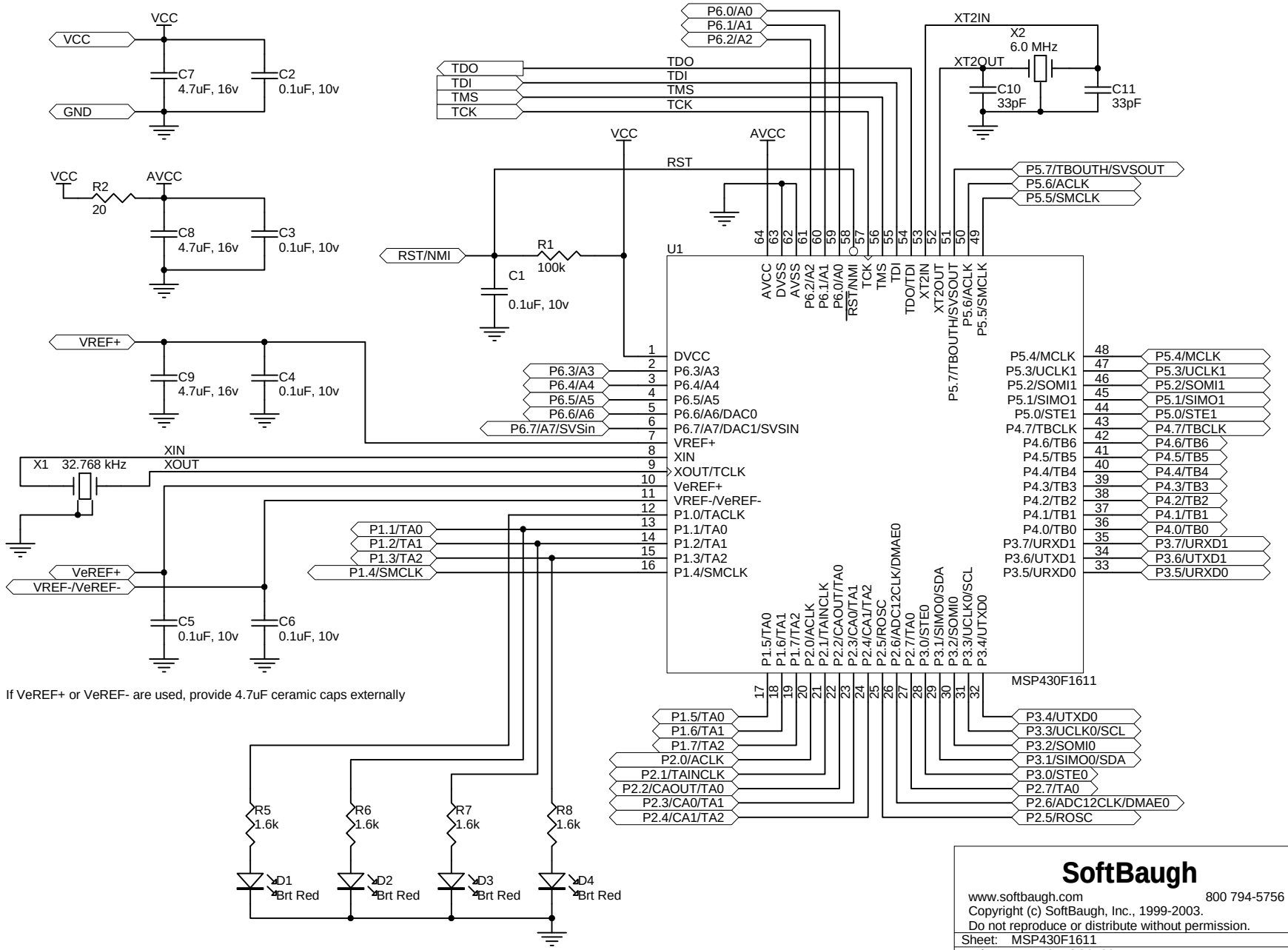

SoftBaugh

www.softbaugh.com 800 794-5756

Copyright (c) SoftBaugh, Inc., 1999-2003.
Do not reproduce or distribute without permission.

Sheet: MSP430F1611		
Project: MRF1611CC2420		
Date: 10-Jul-2006	2 of 3	v. 1.0

CC1100

MRF1611CC1100

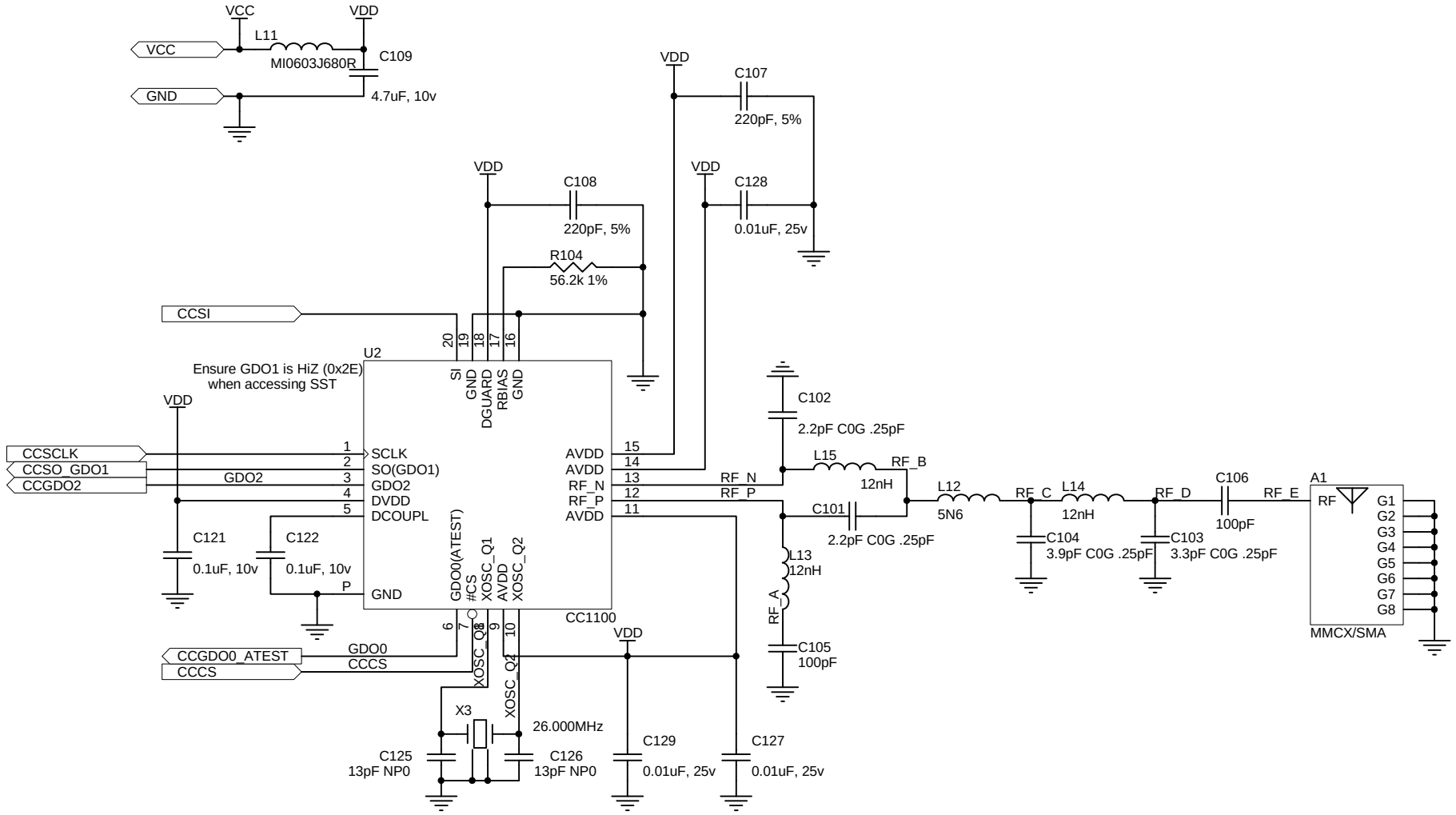

SoftBaugh

www.softbaugh.com 800 794-5756

Copyright (c) SoftBaugh, Inc., 1999-2003.
Do not reproduce or distribute without permission.

Sheet: CC1100		
Project: MRF1611CC1100		
Date: 10-Jul-2006	3 of 3	v. 1.0